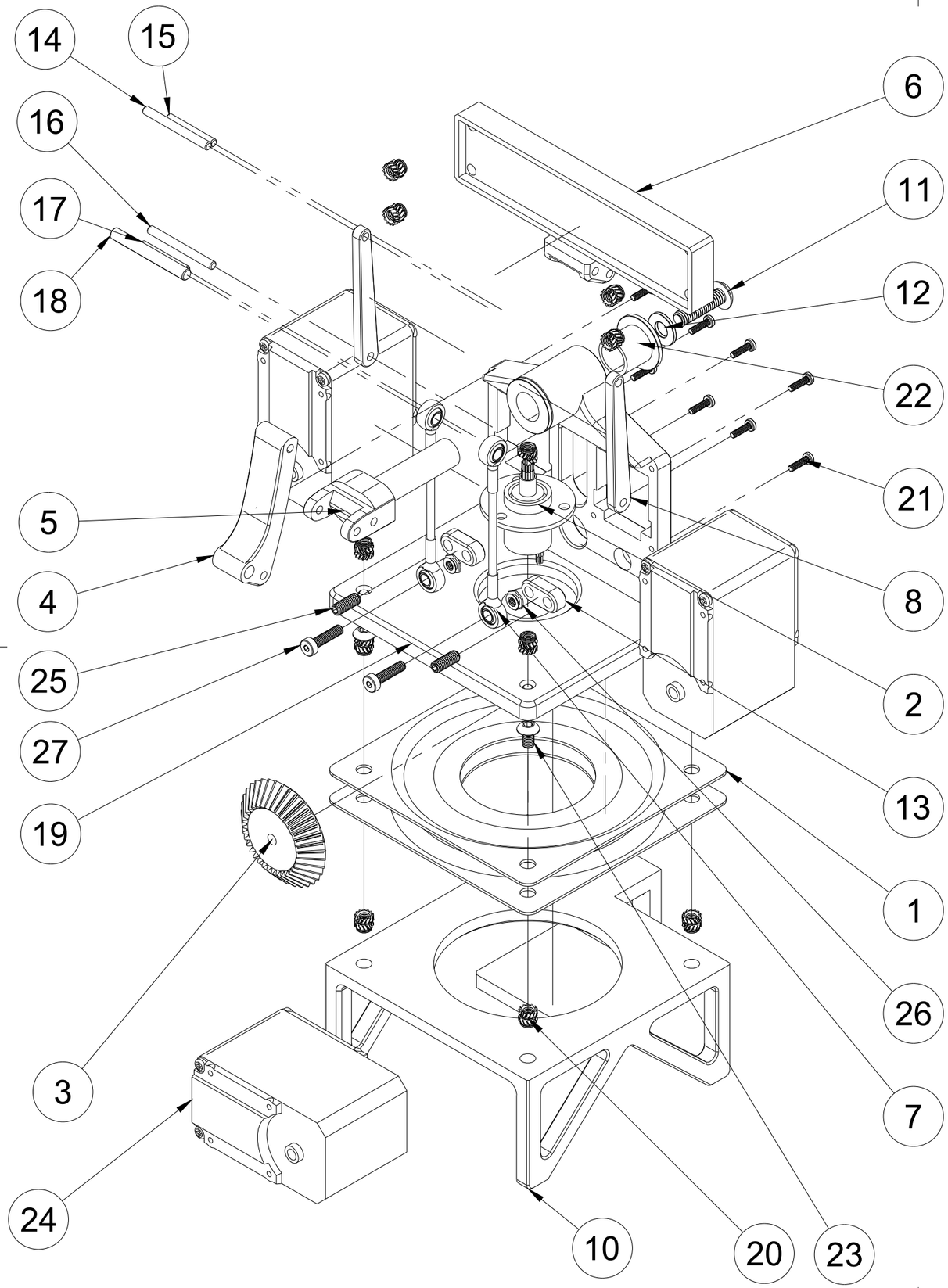

Bill of Material

Item	Qty	Part Name	Material
1	1	Lazy Susan	Steel
2	1	Slip Ring	----
3	1	Input Gear	PLA
4	1	Link	PLA
5	1	Gimbal	PLA
6	1	Camera Mount	PLA
7	1	Link Rod End Ball Joint	Aluminum
8	2	Proximal	PLA
9	1	Camera Model (Hidden)	----
10	1	Base Bottom	PLA
11	1	M4 x 15 mm	Steel
12	1	Washer	Brass
13	1	Servo Links	PLA
14	1	Camera-Proximal Shaft	Steel
15	1	Camera-Link Shaft	Steel
16	1	Proximal-Gimbal Shaft	Steel
17	1	Gimbal-Link Shaft	Steel
18	1	Gimbal-Ball Joint Shaft	Steel
19	1	Top Platform	PLA
20	12	M3 Brass Insert	Brass
21	12	M1.6 x 6 mm	Steel
22	2	M8 Flange Sleeve	Brass
23	8	M3 x 5 mm	Steel
24	3	Servo STS3215	----
25	3	M3 x 8 mm	Steel
26	2	Nut (M2.5 x 1.53 mm)	Steel
27	2	M2.5 x 10 mm	Steel

Dept.	Technical reference	Created by Enrique Kurniawan	Approved by
Scale (1:1.2) *All shaft have a diameter of 1.7 mm		Document type	Document status
		Title Neck Design Assembly	DWG No.
			Rev. / Date of issue 3/9/2026 / Sheet 1/1